DRIVE TRAIN, GEARCASE, FRONT, VENTING - Z26S4D92AN/AH/BN/BH (C750112)

2026 RZR - RZR PRO S4 ULTIMATE (R01) - Z26S4D92AN/AH/BN/BH

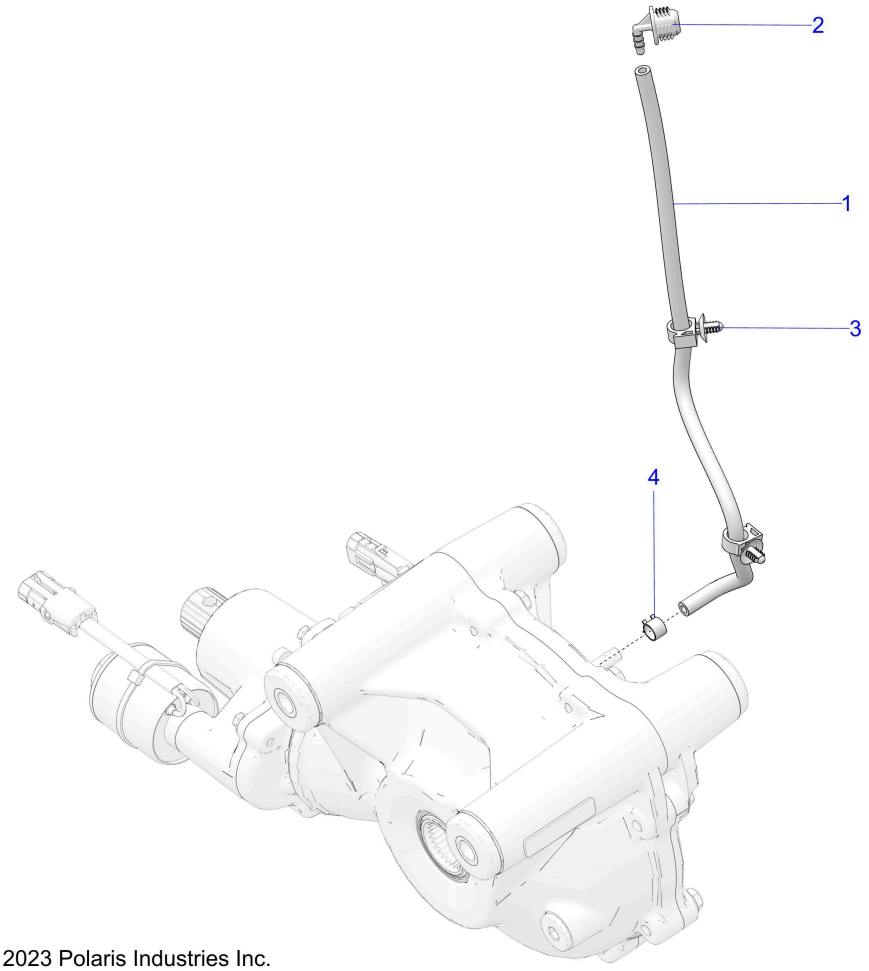

© 2023 Polaris Industries Inc.

C750112

Reference #	*Part#*	*Description*	*Quantity*
1	8450153-43	LINE-BOOST,3/16 ID,43CM	1
2	5454069	FITTING-VENT LINE,90	1
3	7670116	CLIP, ROUTING, .472 B.D., HINGED	2
4	7080307	CLAMP-HOSE, (LARGE GREEN)	1

Copyright 1996-2026 Polaris Industries U.S.A All rights reserved.